PRODUCT DATASHEET
P MR11 20 36° 2.5 W/4000 K GU4

PARATHOM MR11 12 V | Low-voltage LED reflector lamps MR11 with retrofit pin base

AREAS OF APPLICATION

- Display cabinets and shop windows
- Museums, art galleries
- Exhibition rooms
- Residential interiors
- As a downlight for marking walkways, doors, stairs, etc.
- Outdoor applications only in suitable luminaires

PRODUCT BENEFITS

- Long lifetime of up to 15,000 h
- Low energy consumption
- Easy relamping thanks to compact design and GU4 base

PRODUCT FEATURES

- Professional LED alternative to halogen MR11 lamps
- Mercury-free lamps

© 2019, LEDVANCE GmbH. All rights reserved.

TECHNICAL DATA

Electrical data

Rated wattage	2.50 W
Nominal wattage	2.50 W
Nominal voltage	12 V
Claimed equiv. conventional lamp power	20 W
Max. lamp no. on circuit break. 10 A (B)	35
Max. lamp no. on circuit break. 16 A (B)	55
Operating frequency	50…60 Hz
Power factor λ	> 0.50

Photometrical data

Nominal luminous flux	184 lm
Rated luminous flux	184 lm
Rated color temperature	4000 K
Lumen main.fact.at end of nom.life time	0.70
Light color (designation)	Cool White
Color temperature	4000 K
Luminous flux	184 lm
Color rendering index Ra	≥80
Standard deviation of color matching	≤6 sdcm
Color rendering index Ra	≥80
Nominal useful luminous flux 90°	184 lm
Rated useful luminous flux 90°	184 lm
Rated peak intensity	400 cd

Light technical data

Beam angle	36 °
Warm-up time (60 %)	< 0.50 s
Starting time	< 0.5 s
Nominal beam angle	36 °
Rated beam angle (half peak value)	36.00 °

© 2019, LEDVANCE GmbH. All rights reserved.

Dimensions & weight

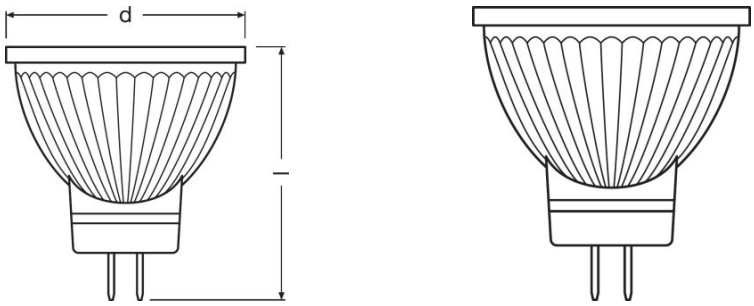

Overall length	38.0 mm
Diameter	35.0 mm
Outer bulb	MR35
Length	38.0 mm
Maximum diameter	35.0 mm

Temperatures & operating conditions

Maximum temperature at tc test point	75 °C

Lifespan

Nominal lamp life time	15000 h
Rated lamp life time	15000 h
Number of switching cycles	100000

Additional product data

Base (standard designation)	GU4
Mercury content	0.0 mg
Mercury-free	Yes
Show WEEE picto	Yes
Product remark	All technical parameters apply to the entire lamp/Due to the complex production process for light-emitting diodes, the typical values shown for the technical LED parameters are purely statistical values that do not necessarily match the actual technical parameters of each individual product, which can vary from the typical value

Capabilities

Dimmable	No

Certificates & standards

Energy efficiency class	A+

© 2019, LEDVANCE GmbH. All rights reserved.

Energy consumption	3 kWh/1000h

Country-specific categorizations

Order reference	LEDPMR112036 2,

Light Distribution

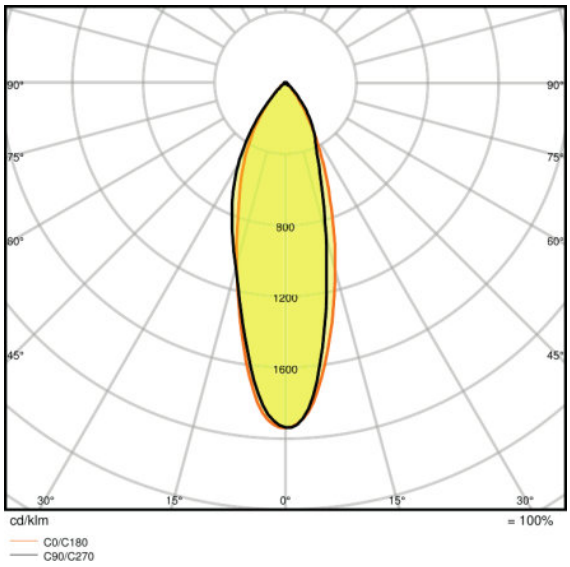

LDC typ polar

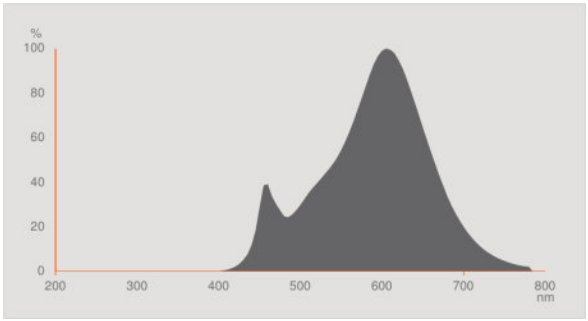

Spectral power distribution

LOGISTICAL DATA

Product code	Product description	Packaging unit (Pieces/Unit)	Dimensions (length x width x height)	Volume	Gross weight
4058075105157	P MR11 20 36° 2.5 W/4000 K GU4	Shipping carton box 10	188 mm x 78 mm x 55 mm	0.81 dm^3	368.00 g

The mentioned product code describes the smallest quantity unit which can be ordered. One shipping unit can contain one or more single products. When placing an order, for the quantity please enter single or multiples of a shipping unit.

REFERENCES / LINKS

For further products and actual information concerning LED lamps see
- www.ledvance.com/ledlamps

For Guarantee see
- www.ledvance.com/guarantee

Further information see
- www.ledvance.com/low-voltage-ledlamps

© 2019, LEDVANCE GmbH. All rights reserved.

DISCLAIMER

Subject to change without notice. Errors and omission excepted. Always make sure to use the most recent release.

© 2019, LEDVANCE GmbH. All rights reserved.