PRODUCT DATASHEET
FLOODLIGHT 20 W 4000 K IP65 BK S

FLOODLIGHT SENSOR 20 | Luminaire with symmetrical light output with 20 W and sensor

AREAS OF APPLICATION

- Replacement for floodlights with halogen lamps
- Car parks and underpasses
- Garages
- Public areas
- Construction areas
- D-sign according to EN 60598-2-24 for fire-risk commercial unit, f. e. by accumulation of dust

PRODUCT BENEFITS

- Energy savings of up to 90 % compared to halogen lamp floodlights
- Frosted cover made of tempered glass for uniform illumination
- Easy adjustment of range, daylight and motion detection via rotary switch
- 3 years guarantee

PRODUCT FEATURES

- Luminaire efficacy: up to 110 lm/W
- Symmetrical beam angle: 100° x 100°
- PIR motion and daylight sensor
- Deactivation of the sensor by switch setting
- Mounting bracket for up to 180° tilting
- Type of protection: IP65
- Impact resistance: IK07
- Ambient temperature in operation: -20...+40 °C

© 2018, LEDVANCE GmbH. All rights reserved.

– Connection via 1 m cable, wiring required

TECHNICAL DATA

Electrical data

Nominal wattage	20.00 W
Operating mode	Electronic control gear (ECG)
Nominal voltage	220...240 V
Power factor λ	≥0.90
Mains frequency	50/60 Hz

Photometrical data

Color temperature	4000 K
Luminous flux	2200 lm
Luminous efficacy	110 lm/W
Standard deviation of color matching	≤5 sdcm
Light color (designation)	Cool White
Color rendering index Ra	≥80
Luminous efficacy of lamp in luminaire	110 lm/W

Light technical data

Beam angle	100 ° x 100 °

Luminaire sensor data

Type of sensor	Motion / Light
Sensor technology	Infrared/Photocell
Sensor detection angle	110 °
Detection range of motion sensor	0...12 m
Detection threshold of daylight sensor	0...1000 lx
Sensor IP rating	IP65

© 2018, LEDVANCE GmbH. All rights reserved.

Dimensions & weight

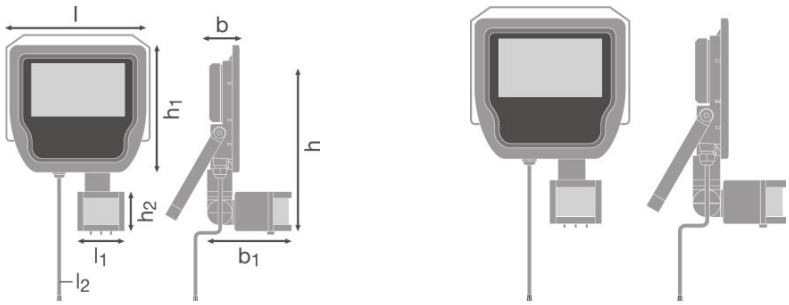

Length	223.5 mm
Width	167.0 mm
Height	104.0 mm
Product weight	560.00 g
Cable length	1000 mm

Colors & materials

Body material	Polycarbonate (PC)
Housing color	Black
Product color	Black
Cover material	TEMPERED GLASS

Temperatures & operating conditions

Ambient temperature range	-20...40 °C

Lifespan

Lifespan L70 at 25 °C	50000 h
Lifespan L80 at 25 °C	30000 h
Lifespan L90 at 25 °C	15000 h

Additional product data

Mounting type	Surface
Mounting location	Wall / Floor
Product remark	Available from July 2018

Capabilities

Dimmable	No
Type of connection	Cable, 3-pole
LED module replaceable	Not replaceable

© 2018, LEDVANCE GmbH. All rights reserved.

Certificates & standards

Protection class IK (shock resistance)	IK07
Photobiological safety group	RG 0
Protection class	I
Type of protection	IP65
Standards	CB/TÜV SÜD/EAC/RoHS

Light Distribution

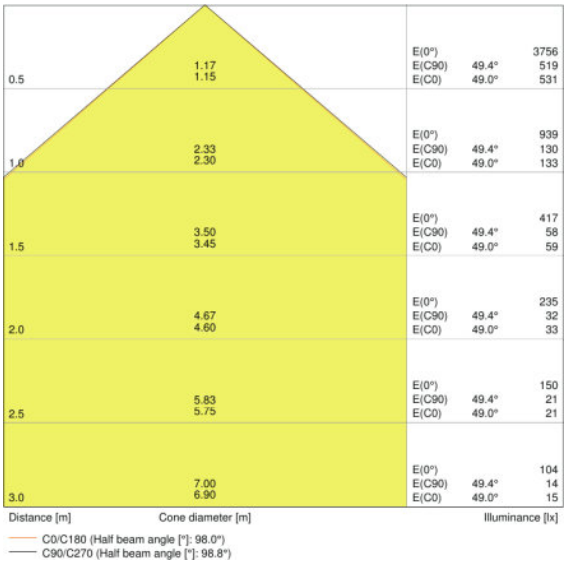

LDC typ cone

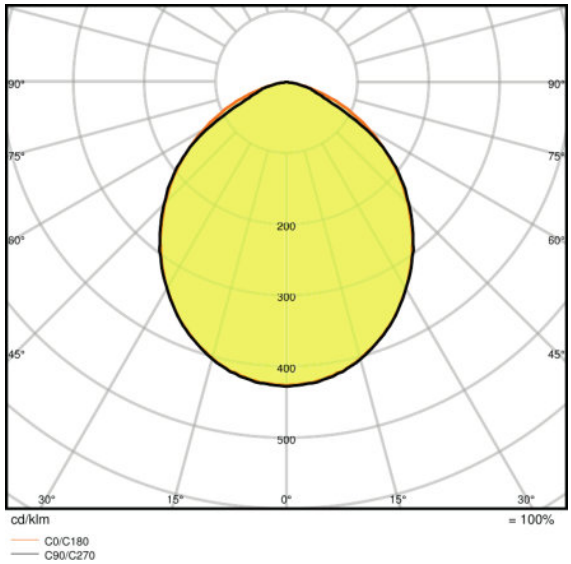

LDC typ polar

LOGISTICAL DATA

Product code	Product description	Packaging unit (Pieces/Unit)	Dimensions (length x width x height)	Volume	Gross weight
4058075143555	FLOODLIGHT 20 W 4000 K IP65 BK S	Shipping carton box 10	388 mm x 347 mm x 275 mm	37.02 dm^3	6780.00 g

The mentioned product code describes the smallest quantity unit which can be ordered. One shipping unit can contain one or more single products. When placing an order, for the quantity please enter single or multiples of a shipping unit.

REFERENCES / LINKS

For Guarantee see

- www.ledvance.com/guarantee

DISCLAIMER

© 2018, LEDVANCE GmbH. All rights reserved.

Subject to change without notice. Errors and omission excepted. Always make sure to use the most recent release.

© 2018, LEDVANCE GmbH. All rights reserved.