LARA LED 300 1200 840 PC WH 96666120

Wall Mounted Luminaire

Circular IP65 bulkhead with optional trim accessories.
Direct replacement for 1x28W 2D. More than 60% energy savings compared with luminaires with CFL lamps. Frosted diffuser ensuring homogeneous light effect and visual comfort.Sealed to IP65 for protected exterior applications. Robust construction tested up to IK08 impact resistance.Integral photocell.
Materials:
Body: Polycarbonate, white (RAL 9003)
Diffuser: Polycarbonate, opal
Complete with 4000K LED, 1200lm. Class II electrical, IP65, IK08.
Luminaire efficacy: 90 lm/W
Rated median useful life: 50.000h L70B50 at 25°C
Weight: 1.1 kg

TE_LARA_F_300_BLANK_WH_persp.jpg

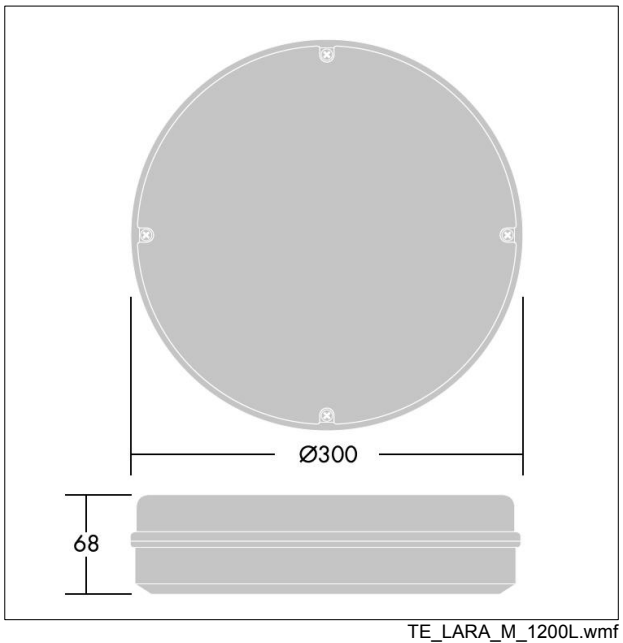

TE_LARA_M_1200L.wmf

Light Distribution STD - standard

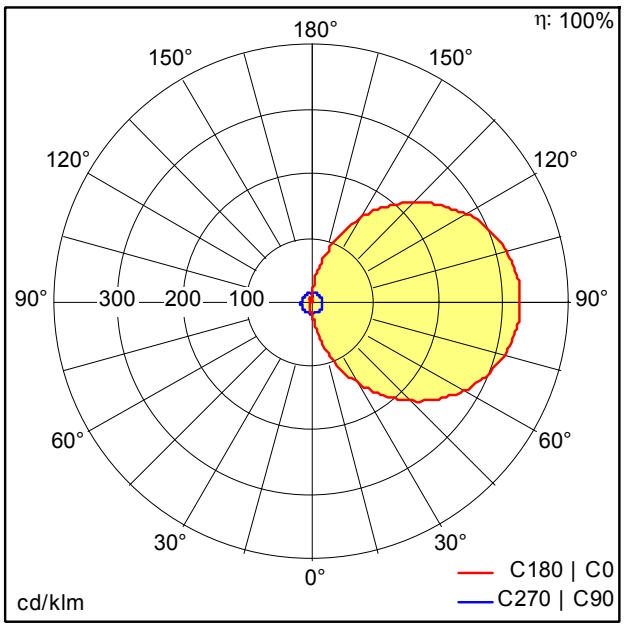

TE_LARA_LED_300_1200_840_PC_WH.ldt

- Light Source: LED
- Luminaire luminous flux*: 1200 lm
- Luminaire efficacy*: 92 lm/W
- Colour Rendering Index min.: 80
- Correlated colour temperature*: 4000 Kelvin
- Chromaticity tolerance (initial MacAdam)*: 4
- Rated median useful life*:
  50000h L70 at 25°C
- Ballast: 1x LED_Con
- Luminaire input power*: 13 W Lambda = 0.55

RoHS IP65 IK08 960°C Ta -10 +40

We reserve the right to make technical changes without prior notice. 07.06.2018 © ThornEco