LEONIE VARIOFLEX IP65 40W 830/35/40 96635647

LED Floodlight

LED Floodlight with symmetric light distribution and FLEX technology, IP65, for outdoor applications. Total luminous flux: 5000 lm, Luminaire input power: 40 W, Luminaire efficacy: 125 lm/W, Colour rendering Ra > 80, colour temperature 3000/3500/4000 K adjustable via switch for 3000K, 3500K or 4000K. Lifetime: 50.000hrs @L80, Chromaticity tolerance (initial MacAdam): 5. 5 Years Guarante, Impact strength: IK08. FLEX technology allows to adjust the input power on site by 3 steps (FLEX1 - 5000 lm (40W), FLEX2 - 4000 lm (30W), FLEX3 - 3300 lm (23W)). For flex data on other colour temperatures please visit website. Dimensions: 177 x 214 x 56 mm, weight: 0.9 kg.

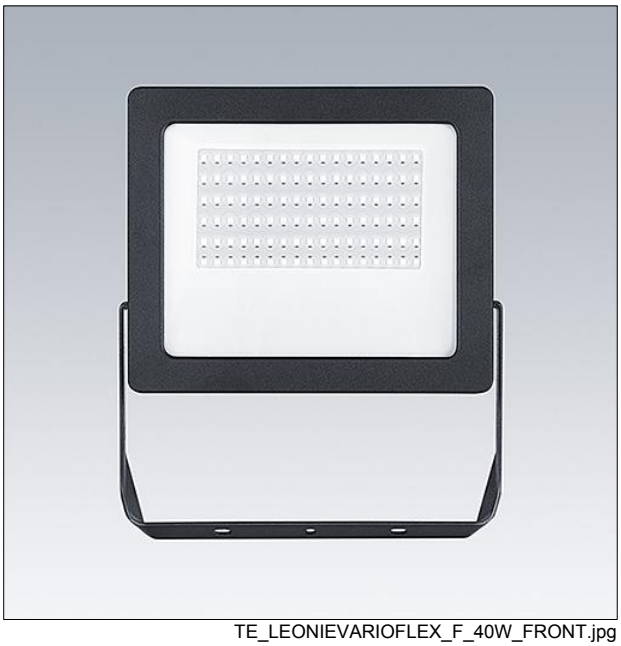

TE_LEONIEVARIOFLEX_F_40W_FRONT.jpg

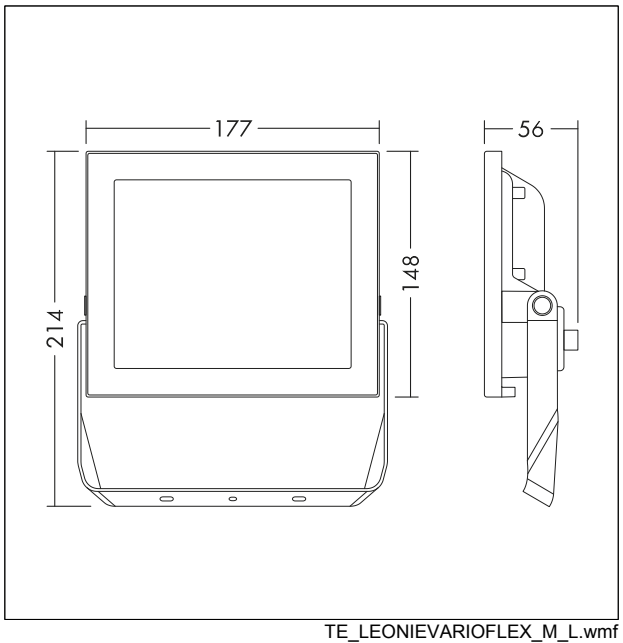

TE_LEONIEVARIOFLEX_M_L.wmf

Light Distribution STD - standard

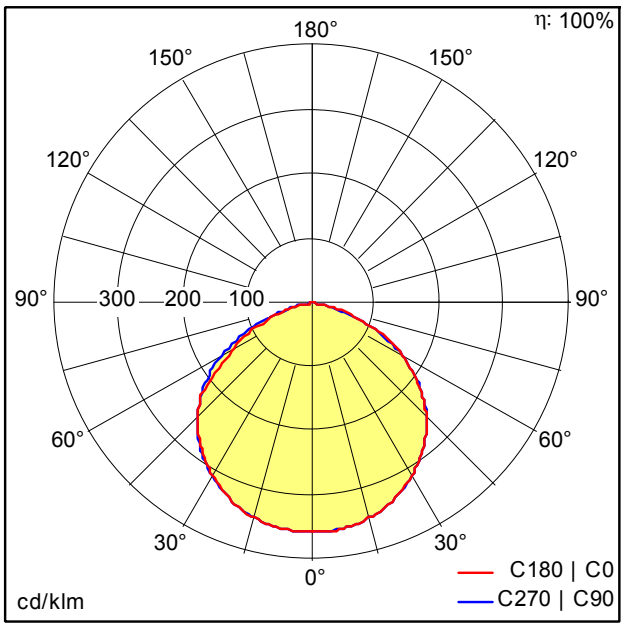

TE_LEONIE_VARIOFLEX_40W_840_FLEX1.ldt

- Light Source: LED
- Luminaire luminous flux*: 5005 lm
- Luminaire efficacy*: 125 lm/W
- Colour Rendering Index min.: 80
- Correlated colour temperature: 3000-4000 Kelvin
- Chromaticity tolerance (initial MacAdam): 5
- Rated median useful life*:
  L80 50000h at 25°C
- Ballast: 1x LED_Con
- Luminaire input power*: 40 W Power factor = 0.9
- Dimming: Fixed output
- Total harmonic distortion (THD): 15.00 %

This product contains a light source of energy efficiency class D.

All values marked with an * are rated values. Luminous flux and connected electrical load are subject to an initial tolerance of +/- 10%. Unless stated otherwise, the values apply to an ambient temperature of 25°C.

IEC EN 60598-1 RG 1 RoHS IP65 IK08 650°C Ta -30 +40

We reserve the right to make technical changes without prior notice. 17.03.2023 © ThornEco